LIMITATIONS ON THE DURATION OF THE RADIATION PULSE DISCHARGE F LASER

YU. N. PANCHENKO, A. V. PUCHIKIN, S. A. YAMPOLSKAYA, I. N. KONOVALOV

Institute of High Current Electronics SB RAS, 2/3, Akademichesky ave., Tomsk, 634055, Russia, *yu.n.panchenko@mail.ru*;

Introduction

A number of scientific and technological applications use long-wavelength radiation in the visible range of the spectrum (740-780 nm), which is formed in broadband solid-state TiSph lasers. Another way to obtain lasing in this spectral range is transitions in atomic fluorine [1-3].

This article presents the results of numerical and experimental studies of the generation of lasing in the red region of the spectrum of an atomic TEA F laser. It was shown that for the ratio of the components of the gas mixture He/F_2 = 1500/7 mbar, a group of intense spectral lines at 731.1, 739.9, and 755.2 nm corresponding to atomic fluorine transitions corresponding to $3p\ ^2S^0_{1/2} \rightarrow 3s^2P_{3/2}$, $3p\ ^4P^0_{5/2} \rightarrow 3s^4P_{5/2}$, and $3p^4P^0_{5/2} \rightarrow 3s\ ^4P_{3/2}$, respectively. Also in the output radiation there is a spectral line of 634.8 nm, corresponding to the transition $3p^4P^0_{3/2} \rightarrow 3s\ ^4P_{3/2}$.

1. M.A. Kovacs, C. J. Ultee, *Appl. Phys. Lett., 17, 39, 1970.*

Plasma-chemical reactions

The population of the upper electronic level 3p of the excited fluorine atom flows through the ion-ion and charge-transfer collisions channels [1, 2]:

$$He^{+} + F^{-} \rightarrow He + F^{*};$$
$$He_2^{+} + F^{-} \rightarrow 2He + F^{*};$$
$$He^{*} + F_2 \rightarrow He^{*} + F^{*} + F.$$

In our numerical calculations, it was shown that the rates of formation of excited fluorine atoms in ion-ion recombination reactions and collision reactions with excitation transfer were close to each other and amounted to ~ 1.8×10^{21} $cm^{-3}s^{-1}$.

2. C. B. Collins, F. W. Lee, and J. M. Carroll, *Appl. Phys. Lett., vol. 37, no. 10, pp. 857-859, 1980.*
3. H. Mehravaran, P. Parvin, and D. Dorranian, *Appl. Opt., vol. 49, no. 15, pp. 2741-2748, 2010.*

Experimental setup

The experiments were carried out on discharge F_2 laser with a pulse repetition rate of 500 Hz, the electrical pump circuit of the laser is shown in Fig. 1.

Preionization of the discharge gap was carried out by UV - radiation that occurs at triggering spark gaps installed in the second loop of the circuit. Storage capacitors C1 and discharge capacitor C2 had the values of 5.6 and 4.4 nF respectively. Thyratron TPI1-10k/20 was used as the HV-switch. The inductance of the first L2 and the second L3 discharge contours were 200 and 4 nH respectively. The length of the electrodes was 250 mm, the electrode gap – 12 mm. Electrodes were of cylindrical shape work surface with the radius of 3 mm.

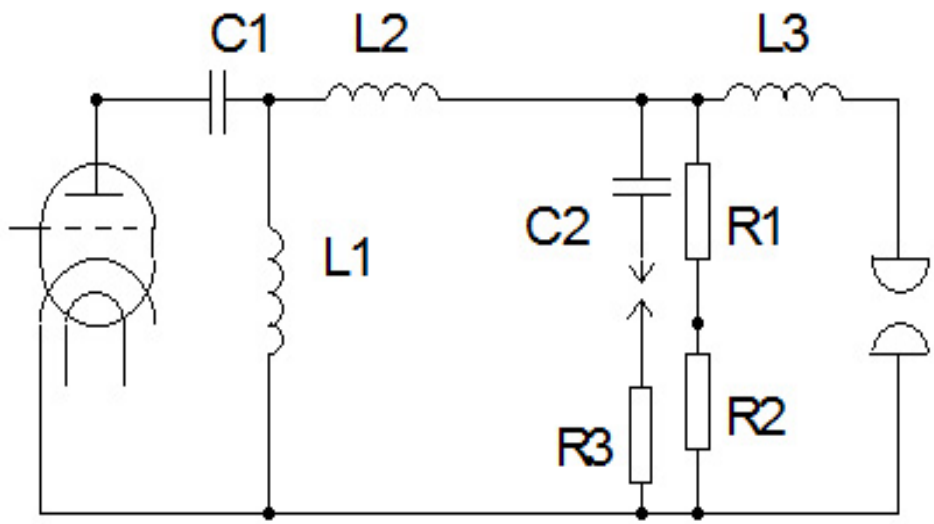

Fig.1. Schematic diagram of excitation circuit. C1= 5.6 nF, C2= 4.4 nF, L1= 0.15 mH, L2 = 200 nH, L3 = 3 nH.

Experimental results

It was experimentally shown that at a charging voltage of 20 kV, the energy of the output radiation of the F-laser was 0.05 mJ, with pulse duration of 3.5 ns, gas mixture He/F2-2000/7 mbar.

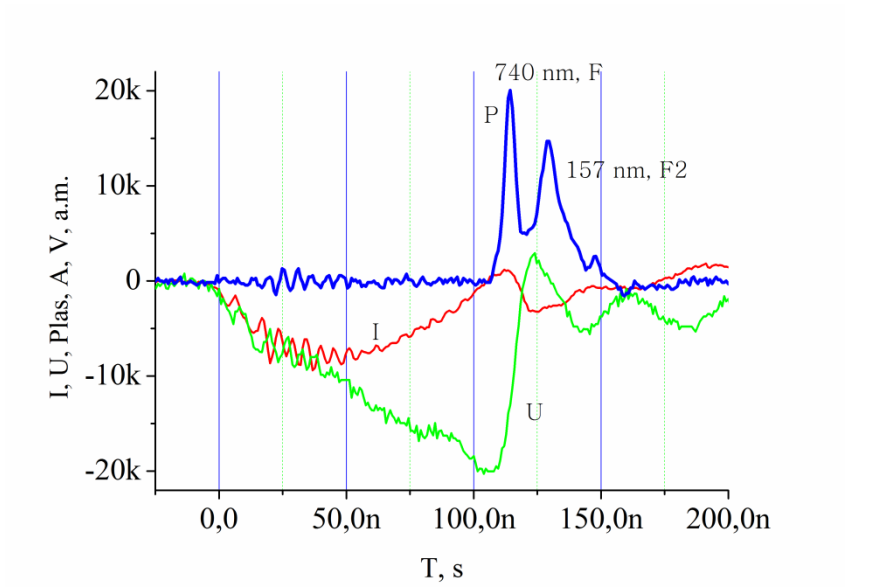

Fig. 2. Oscillograms of current pulses, voltage across the discharge capacitor C2 and laser radiation

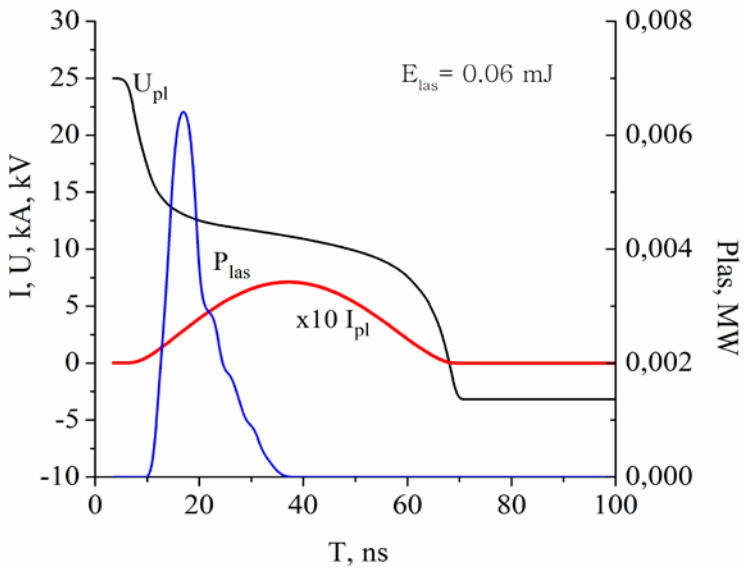

Fig. 3. Numerical the time behavior of current pulses - I, voltage across – U on the discharge plasma and laser radiation – P.

Experimental results

The results of numerical simulations presented in Fig. 2 show that the limitation of the pulse duration of the induced radiation is due to the population of the lower laser level F*(3s).

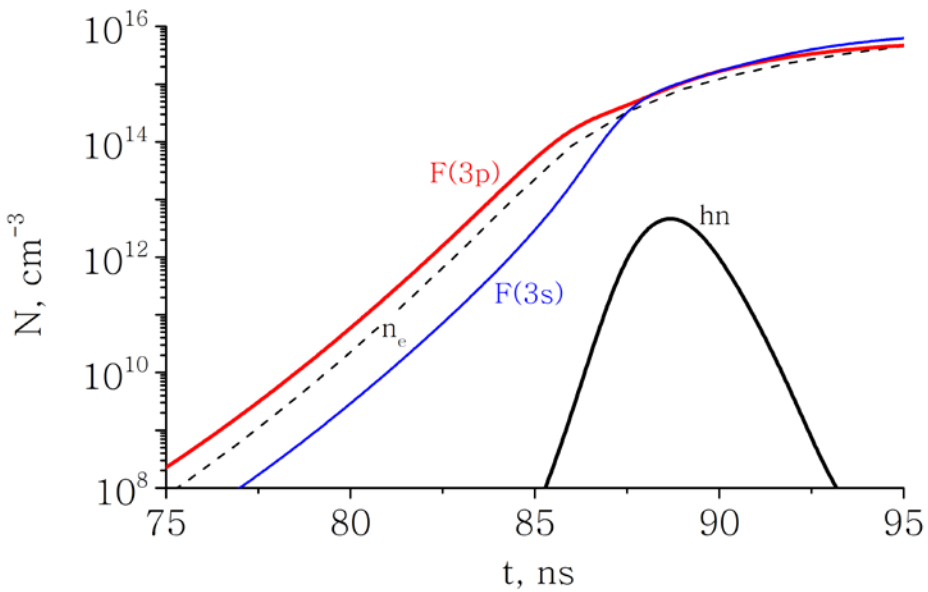

Fig. 2. Time dependences of the concentration of plasma particles: concentrations of excited atoms F*(3p), F*(3s), electrons – ne, radiation – hn.

Conclusion

It was shown that for the ratio of the components of the gas mixture He/F_2 = (1500-2000)/7 mbar, a group of intense spectral lines at 739.9, and 755.2 nm corresponding to atomic fluorine transitions corresponding to $3p\ ^4P^0_{5/2} \rightarrow 3s^4P_{5/2}$, and $3p^4P^0_{5/2} \rightarrow 3s\ ^4P_{3/2}$, respectively. The laser operated with a pulse repetition rate of 500 Hz, the radiation energy was 0.05 mJ

This work was supported by RFBR (projects No. 20-08-00371 A)