Gas Dynamic Properties of Low Voltage Partial Discharges

E.A.YAKOVLEV, A.D.MEKHTIYEV, V.V YUGAY, L.A. ZINOVYEV, N.B.KALIASKAROV

Karaganda technical state university, Karaganda state university

Experimental Setup

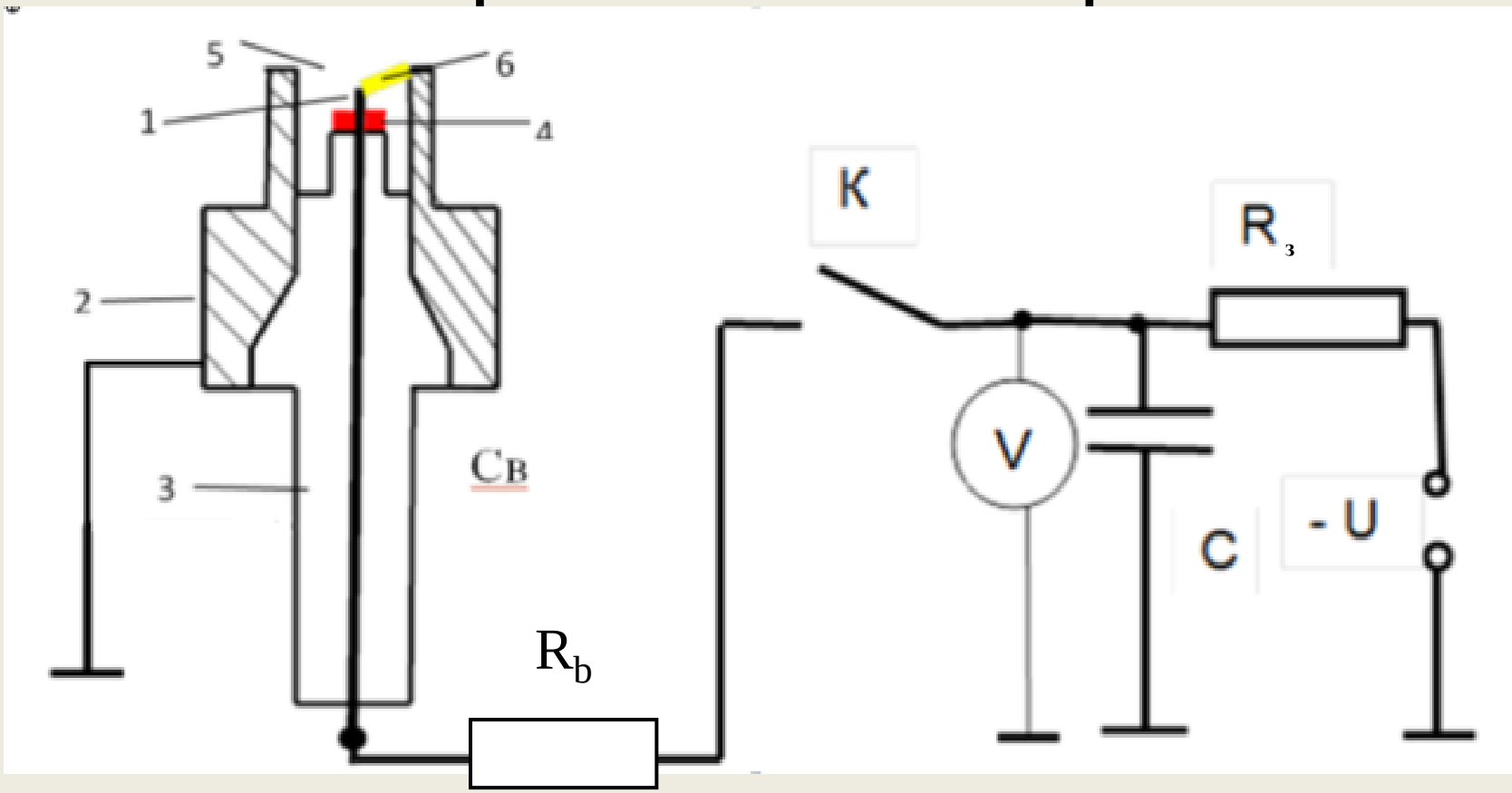

Scheme of partial discharge generation on a spark plug: U - direct voltage source 0-1000V, $R_з$ - charging resistance, R_b - ballast resistance, V - digital voltmeter, K - low voltage switch, Св - spark plug, 1 - central electrode, 2 - grounded electrode, 3 - dielectric, 4 - ignition place of incomplete partial discharge (stage I), 5 - discharge gap, 6 - ignition place of completed partial discharge (stage II).

The conditions of the experiment

Operation in incomplete discharge mode.

The voltage of the charged capacitor was 610 V. When closing the switch, there was an incomplete discharge, characterized by a reddish color in area 4.Value of discharge current made 0,6 - 2A and was limited by resistance of the electrolyte, which changed within the limits of 300...10000 Ohm. Time of incomplete discharge existence was 0.1 s

Operation in completed discharge mode.

The capacitor charge voltage was increased to 740 V. When closing the switch, an incomplete discharge with energy 1.5 times higher than at 610 V occurred. In addition, the voltage in the discharge gap increased 1.2 times and this gap broke through with a short delay time. There was a bright white flame accompanied by loud sound

Calculation scheme for determining pressure at partial discharge: 1 - spark plug, 2 - reactor, 3 - measuring plug.

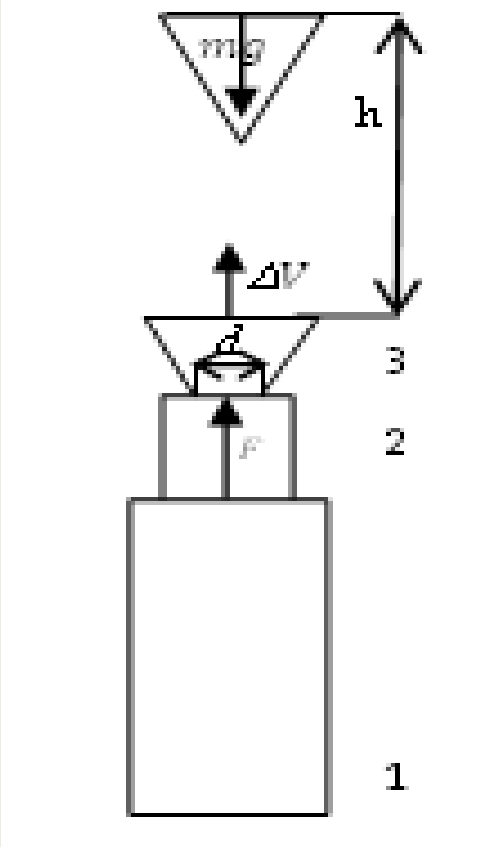

$$p = \frac{4m\sqrt{2gh}}{d^2 \Delta t}$$

where F is the pressure force of the electric discharge shock wave, H; m - mass of the measuring plug, kg; Δt - time of discharge, s; g - acceleration of the force of gravity, g=9.8 m/s^2; h - height of the measuring plug lifting, m; d - diameter of the reactor hole

Photograph of a spherical object flying out of a spark plug. R_b=68 Ohm, U=950 V, Δt=1/30 s: a- discharge radiation during the current flow, b- spherical object flew out after the current flow stopped

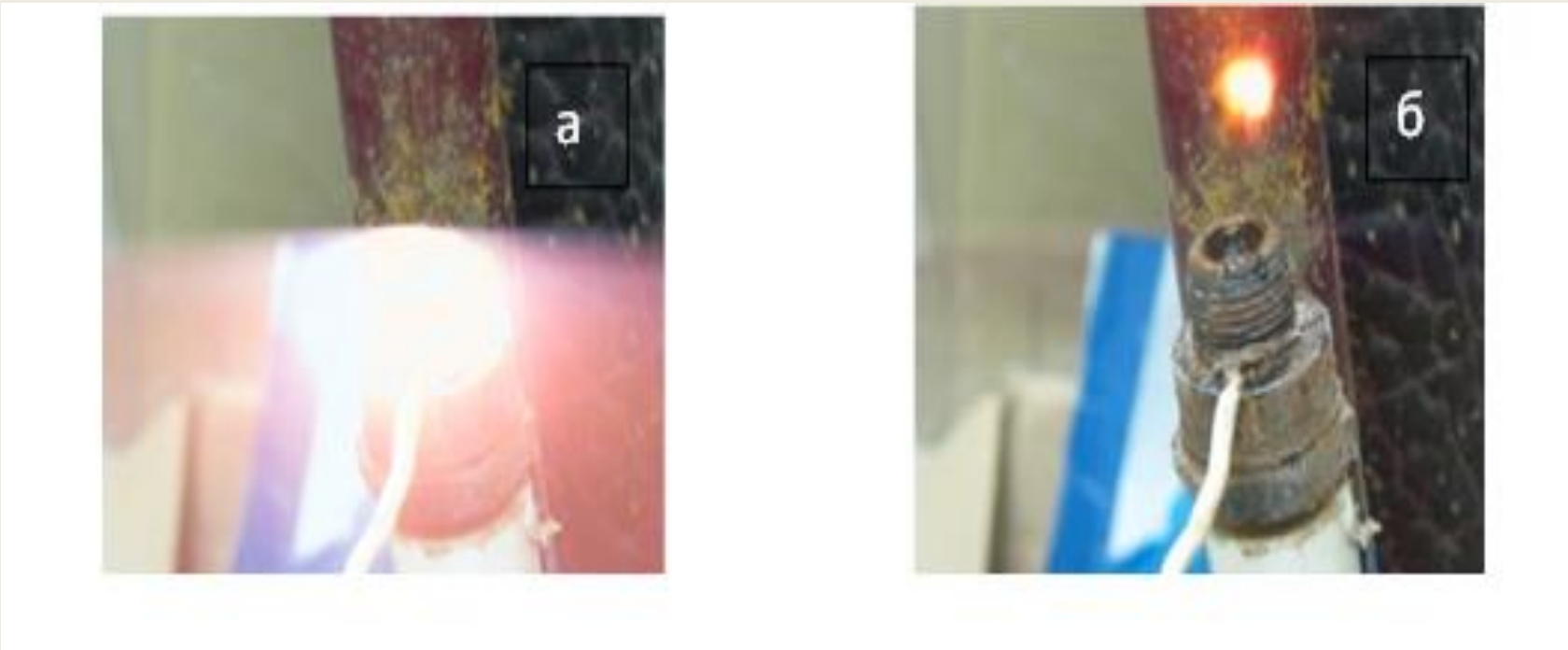

Photos of objects at different operating modes: a). R_b=0 , U=1200 V, b). R_b=68 Ohm, U=610 V

Partial discharge development in the reactor: U=950 V, Rb=0, Δt = 1/240 s 1 - completed discharge; 2 - gas emission in the reactor; 3 - gas ball formation; 4,5 - cooling and extinction of gas ball

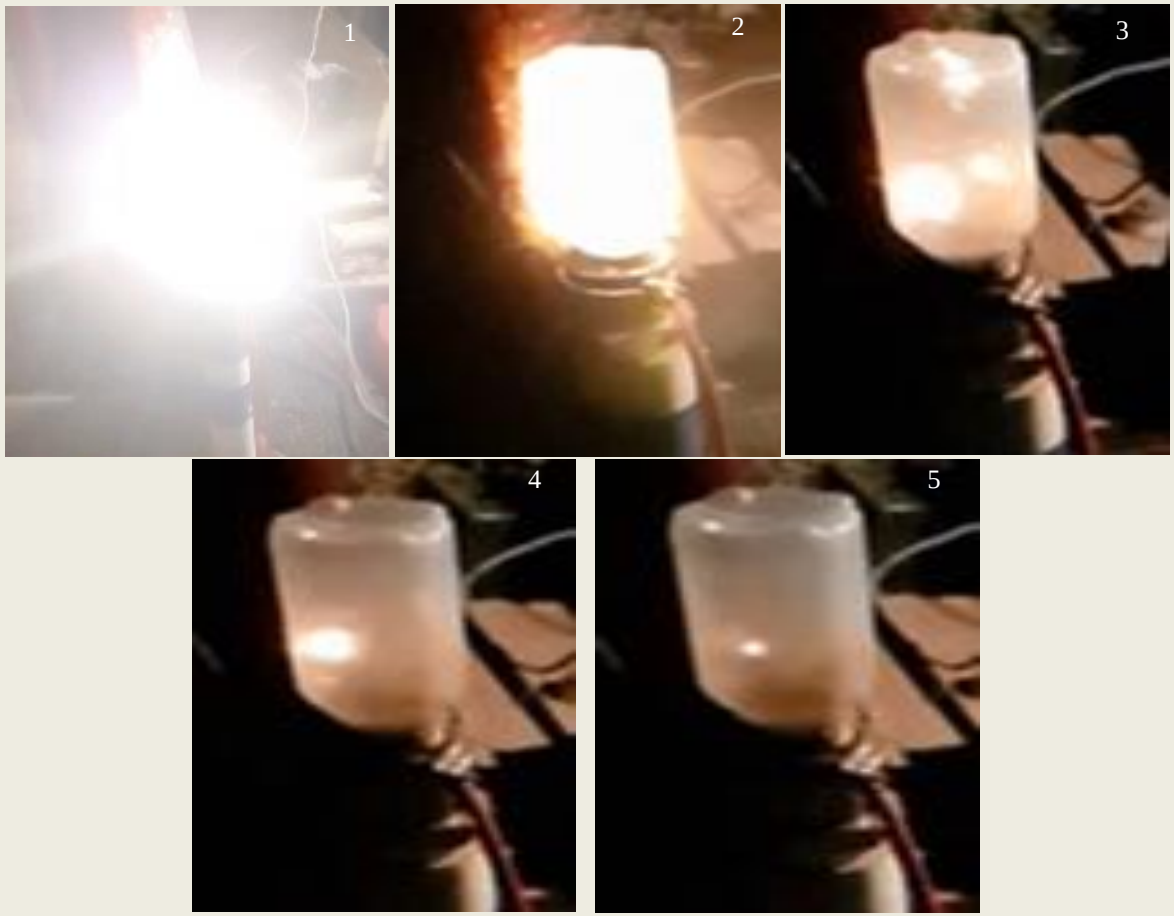

Development of a partial discharge in the reactor U=950 B, Rb=68 Ohms, Δt = 1/240 c: 1-completed discharge; 2-radiation of gas in the reactor; 3- gas ball formation ; 4 extinction of the gas ball

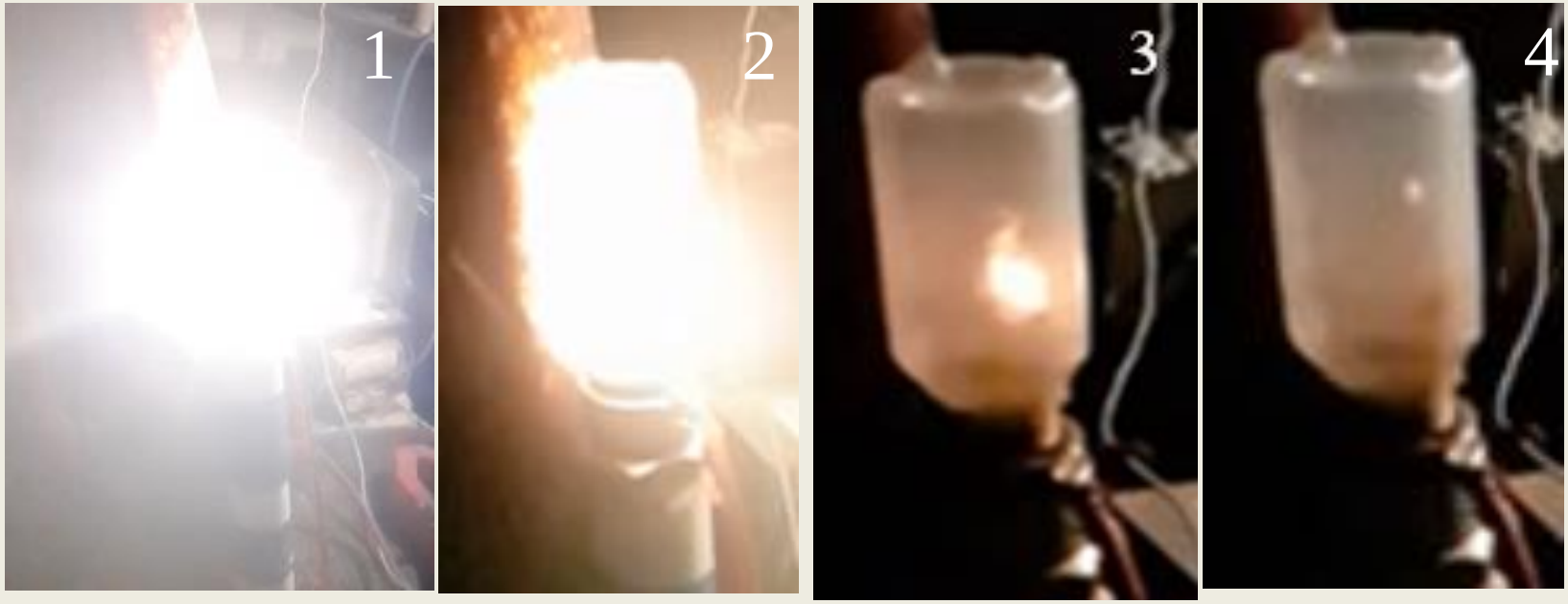

Table 1 - Overpressure in reactor at low voltage partial discharge

№	Place	R_b, Ohm	Δt, s	h, m	ΔV, m/s	m, kg	p, Pa
1	Reactor	0	0,001	1,0	4,4	$0{,}71.10^{-3}$	27800
2	Reactor	68	0,004	0,06	1,08	$0{,}71.10^{-3}$	1700
3	Spark plug	0	0,001	1,8	5,94	$1{,}31.10^{-3}$	155000
4	Spark plug	68	0,004	0,13	1,59	$1{,}31.10^{-3}$	10350

CONCLUSIONS

1. When completed partial discharge , "turbulized gas balls" are formed in a free atmosphere. Depending on the energy of the discharge, the balls either explode immediately or fade away gradually. Explosions of gas balls are caused by the high overpressure of the shock wave developing in the gas.

2. At the completed partial discharge in the plasma-chemical reactor (trap) isolated from the atmosphere, at high discharge energy the balls do not explode, but gradually extinguish. This is due to the rapid relaxation of pressure inside the PCR, which has a minimum volume (about 5 volumes of gas ball).

3. The gas ball size and shock wave pressure in the PCR are proportional to the energy released during the completed discharge. In a confined reactor and a high discharge current, the gas ball is retained and gradually cools down as opposed to a completed discharge in the free space, when they explode.

Thank you for your attention