IEP UB RAS

Russian Academy of Sciences
Institute of Electrophysics
Pulsed Power Laboratory

GENERATION OF MULTI-GIGAWATT PICOSECOND PULSES BY MAGNETIC COMPRESSION LINES

E.A. Alichkin, M.S. Pedos, A.V. Ponomarev,
S.N. Rukin, K.A. Sharypov, S.P. Timoshenkov

EFRE-2020
21st International Symposium on High Current Electronics

TABLE OF CONTENTS

1. Introduction

2. Engineering evaluations for energy compression system

3. Design of the system and experimental results

3.1. Two-stage compressor
3.2. Three-stage compressor
3.3. Four-stage compressor

4. Limitations of the method

5. Conclusions

INTRODUCTION

Solid-state peak power amplifier based on NLTL

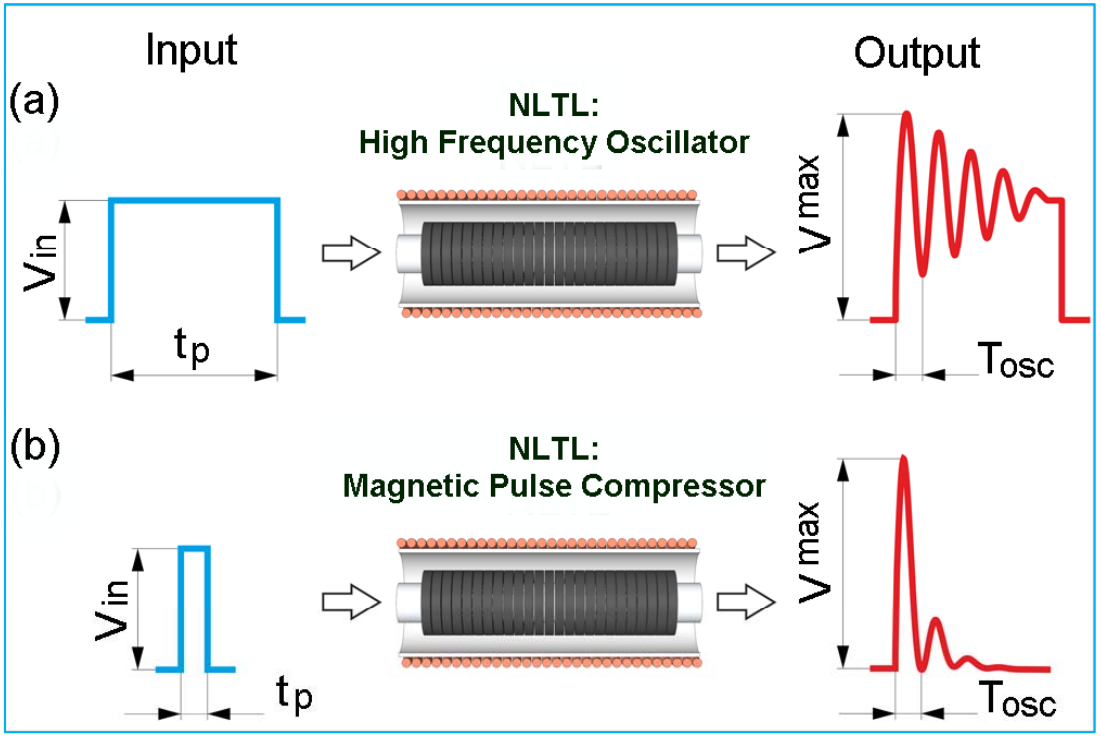

V. V. Rostov et al. "Effective Transformation of the Energy of High Voltage Pulses into High Frequency Oscillations Using a Saturated Ferrite Loaded Transmission Line," Tech. Phys. Lett. **35**, 626–628 (2009)

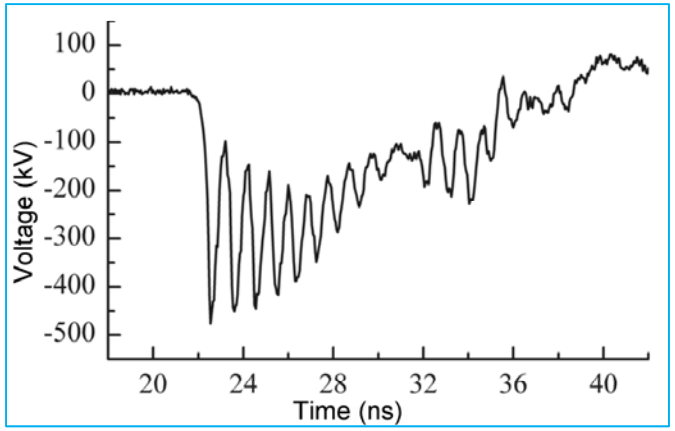

FWHM ~9 ns, T_{osc} ~0.9 ns (f = 1.1 GHz)
Input pulse amplitude ~300 kV
First peak amplitude ~450 kV

Two operating regimes of a gyromagnetic NLTL:
(a) NLTL serves as HPM source ($t_p >> T_{osc}$)
(b) NLTL operates as a Magnetic Compression Line (MCL) with a peak power amplification ($t_p \sim T_{osc}$)

A.I. Gusev, M.S. Pedos, S.N. Rukin, and S.P. Timoshenkov, "Solid-state repetitive generator with a gyromagnetic nonlinear transmission line operating as a peak power amplifier," Rev. Sci. Instrum. **88**, 074703 (2017).

Romanchenko & Rostov calculations:

$$V^{max} = \sqrt{2}\, V_{in}$$

Engineering evaluations

The power gain of the Magnetic Compression Line (MCL) is described by the expression:

$$(1) \qquad K_P = \frac{P_2^{max}}{P_1^{max}} = \frac{t_{1(b)}}{T_{osc}} \cdot \eta = K_c \cdot \eta$$

where K_P is the power gain (the ratio of the peak powers of the output and input pulses), $t_{1(b)}$ is the duration of the input pulse at the base level, T_{osc} is the period of oscillations generated in the line, $\eta = W_2/W_1$ is the conversion efficiency of the pulse, which is equal to the ratio of the energies of the output and input pulses, and $K_c = t_{1(b)}/T_{osc}$ is the pulse time compression coefficient.

For $K_P = 2$ and η ~0.5–0.7, the optimal compression coefficient K_c from (1) should be in the range of ~3–4. This requires a proportional increase in the oscillation frequency in the line by increasing the azimuthal magnetic field H_θ in ferrite rings since $T_{osc} \sim 1/H_\theta$. Taking into account $K_P = 2$ (an increase in current pulse amplitude in the line by ~1.4 times), the necessary **increase in the azimuthal field during the transition from the previous stage of pulse amplification to the next one is achieved by reducing the diameters of the line conductors and ferrite rings by ~2.0–2.8 times.**

Input pulse: S–500 generator

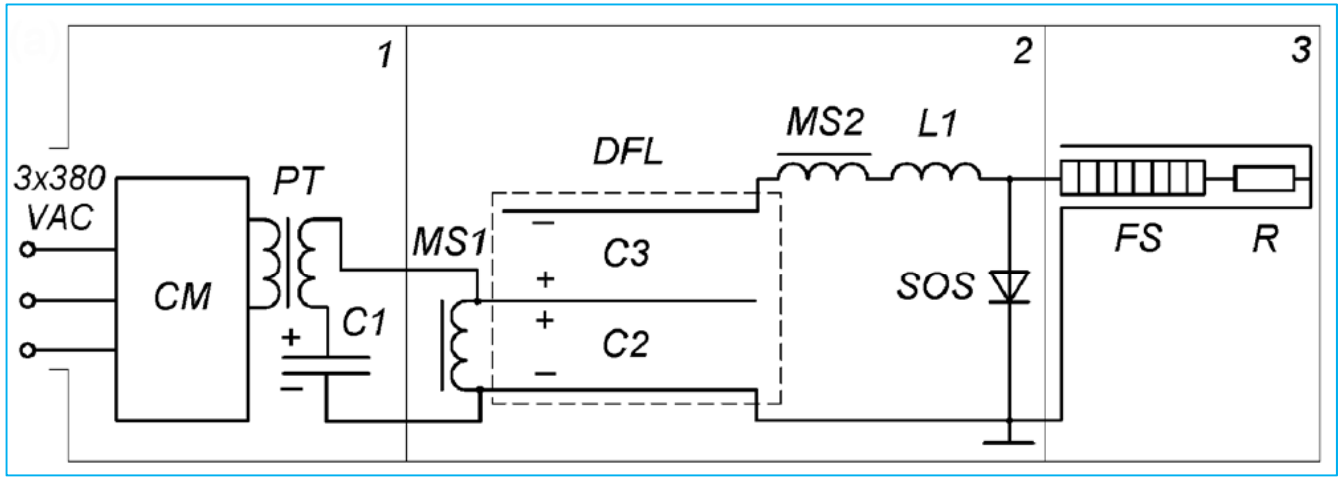

Electrical circuit of the S-500 generator: 1 – elements of the DFL charging unit, 2 – DFL–SOS unit, 3 – transmission line with ferrite sharpener FS and load R

Output parameters of the S-500 generator

Loads	40–125 Ω
Peak voltage	500–900 kV
FWHM	~7 ns
Peak power	~6 GW
Burst PRF	up to 1 kHz

SOS parameters

Cutoff current	~14 kA
Cutoff time	~2 ns
Breaking power	~13 GW
$(dI/dt)^{max}$	~7 kA/ns

EEW	~1 kA/ns
POS	~10 kA/ns

SOS unit of S–500 generator

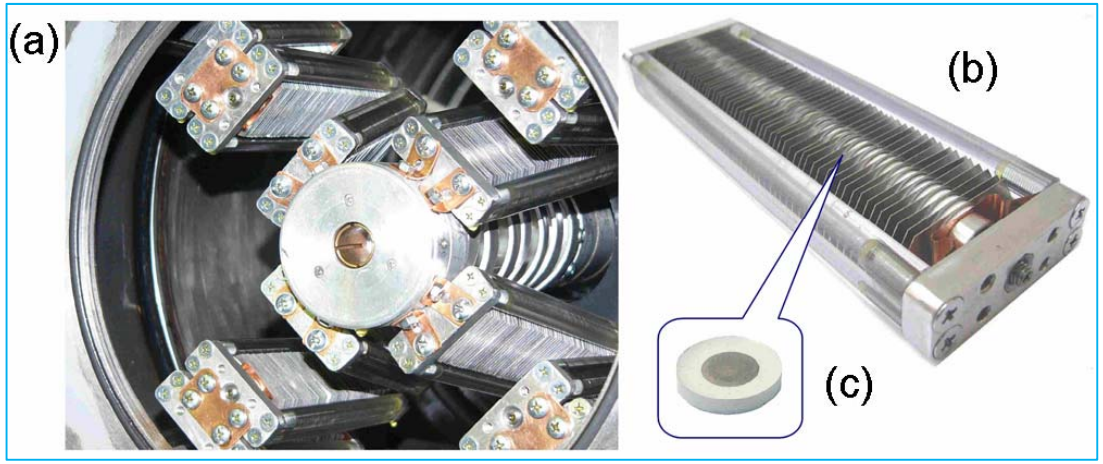

SOS unit (a), SOS diode (b), and elementary SOS diode (c). Total number of the diode structures – 3648 pieces.

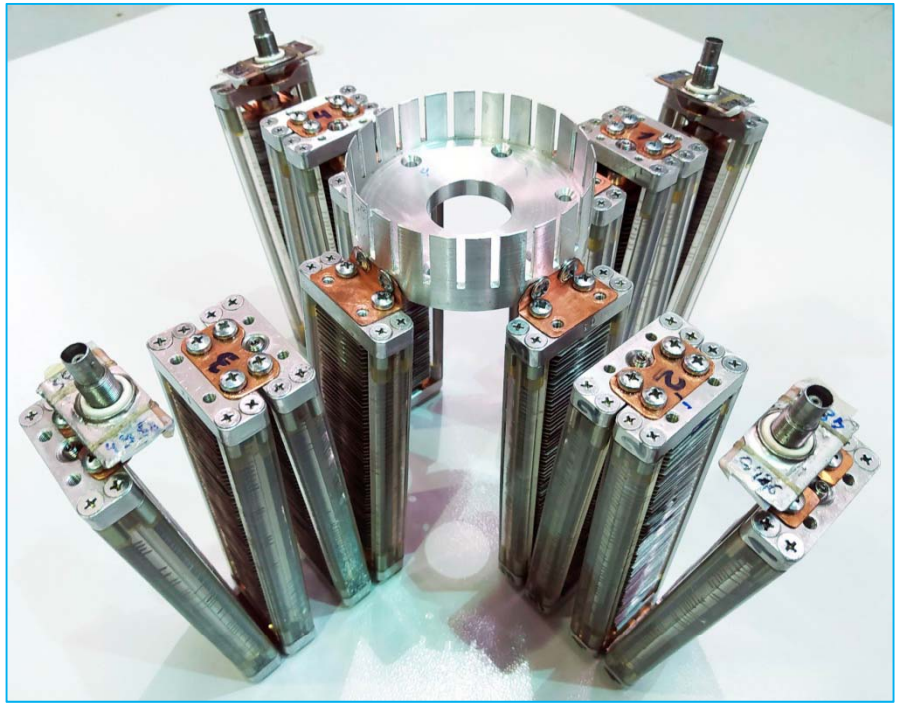

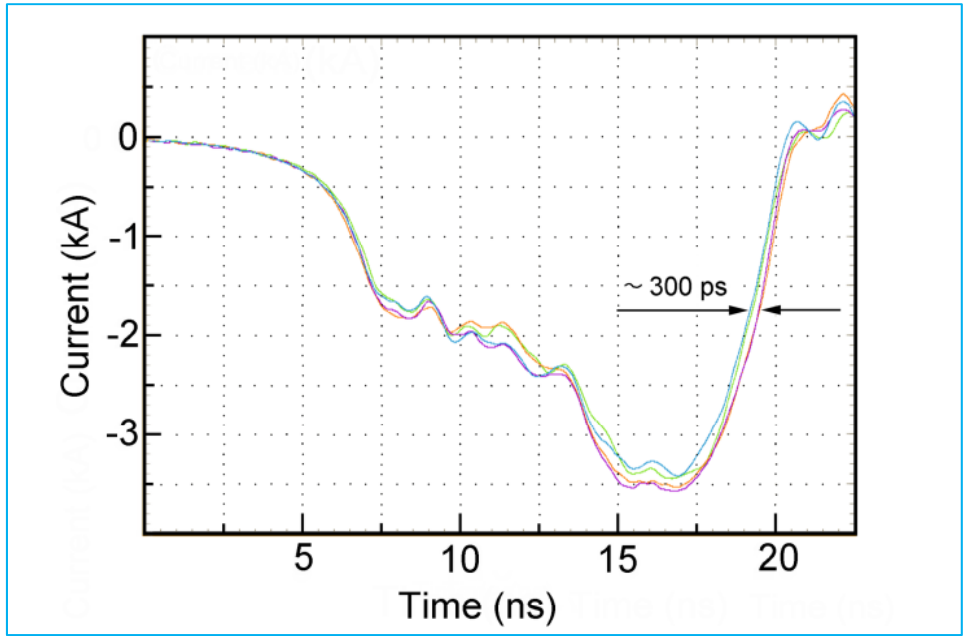

Reverse current through each branch of the SOS

Two-stage compressor

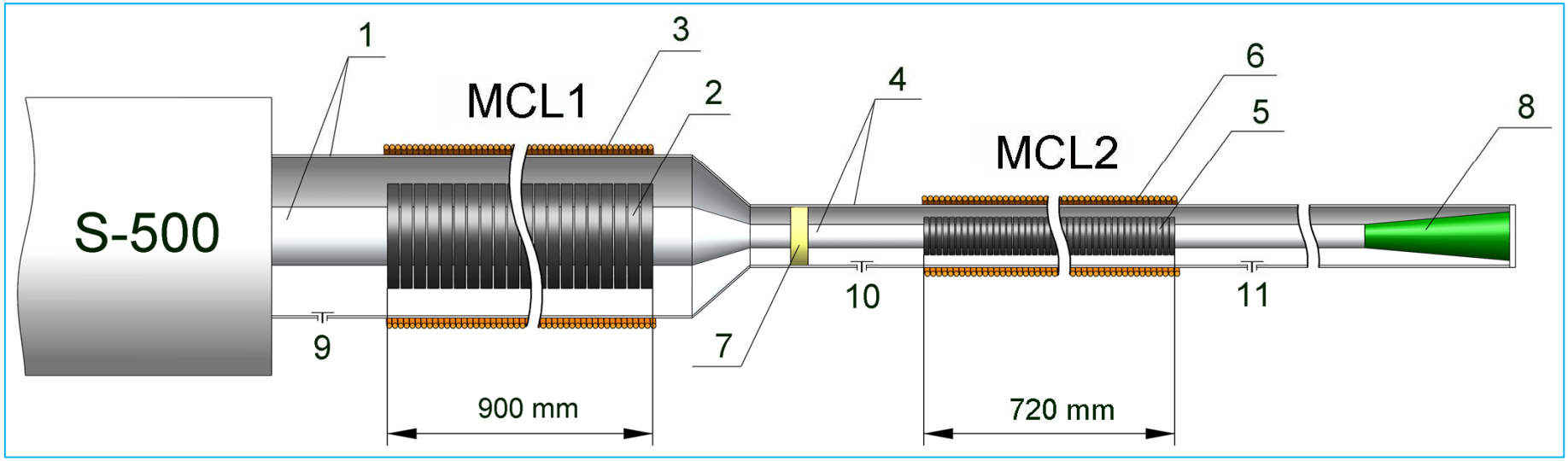

MCL – Magnetic Compression Line (t_p ~T_{osc})

Parameters of the compression system. *D* and *d* – diameters of the outer (*D*) and inner (*d*) conductors of the line, ρ – wave impedance of the line calculated at ε_{oil} = 2.25, D_f and d_f – outer (D_f) and inner (d_f) diameters of the ferrite rings, ΔH_Z – range of variation of the bias magnetic field in the solenoid.

Parameter	D (mm)	d (mm)	ρ (Ω)	D_f (mm)	d_f (mm)	ΔH_Z (kA/m)
MCL1	275	102	39.7	180	110	0–40
MCL2	101	37	40.2	65	40	0–90

Two-stage compressor

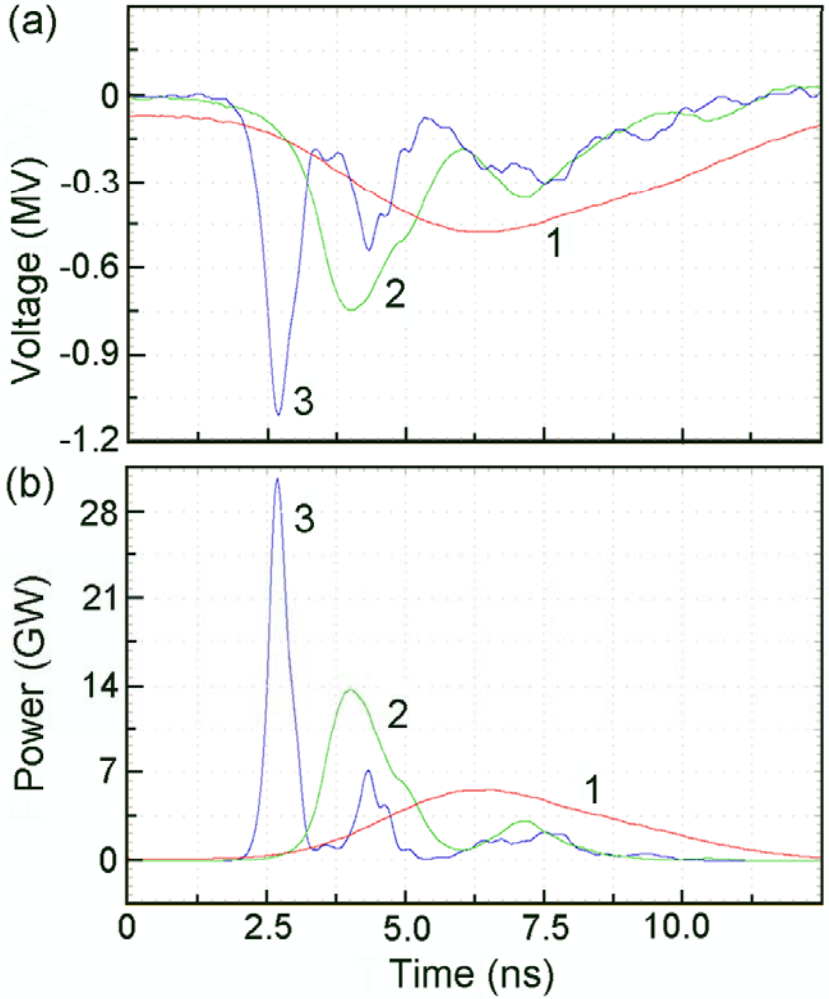

Waveforms of the voltage (a) and power (b) of the input pulses (curve 1), pulses after line MCL1 (curve 2), and pulses after line MCL2 (curve 3) obtained at optimal values of *n* and *H* in both lines.

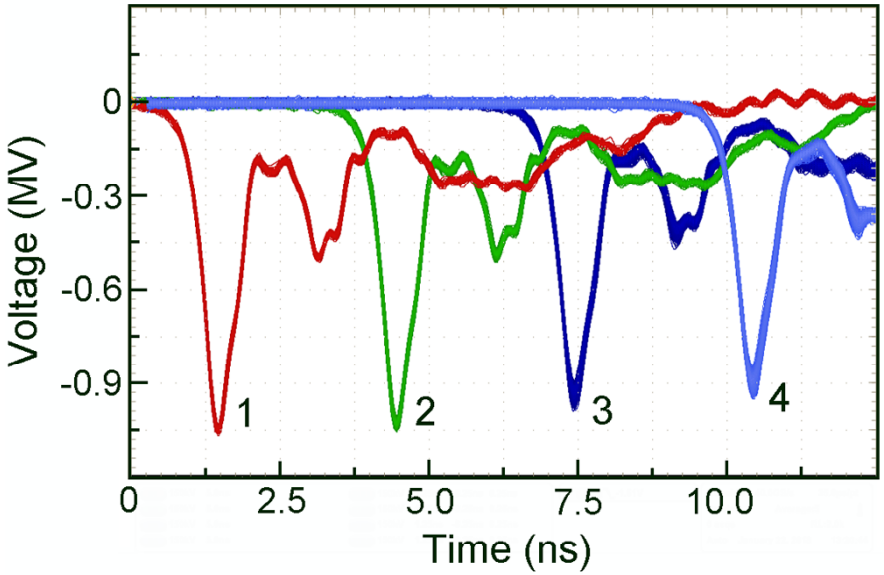

Waveforms of the output voltage pulse after line MCL2 obtained in the burst operating mode (accumulation of 100 pulses): PRF=100 Hz (curve 1); 300 Hz (curve 2); 600 Hz (curve 3); and 1 kHz (curve 4).

Pulse	V^m (MV)	P^m (GW)	t_p (ns)	W (J)
Input pulse	0.5	6.2	7.0	33
After MCL1	0.74	13.6	2.2	22
After MCL2	1.12	31.4	0.65	14.8

Three-stage compressor

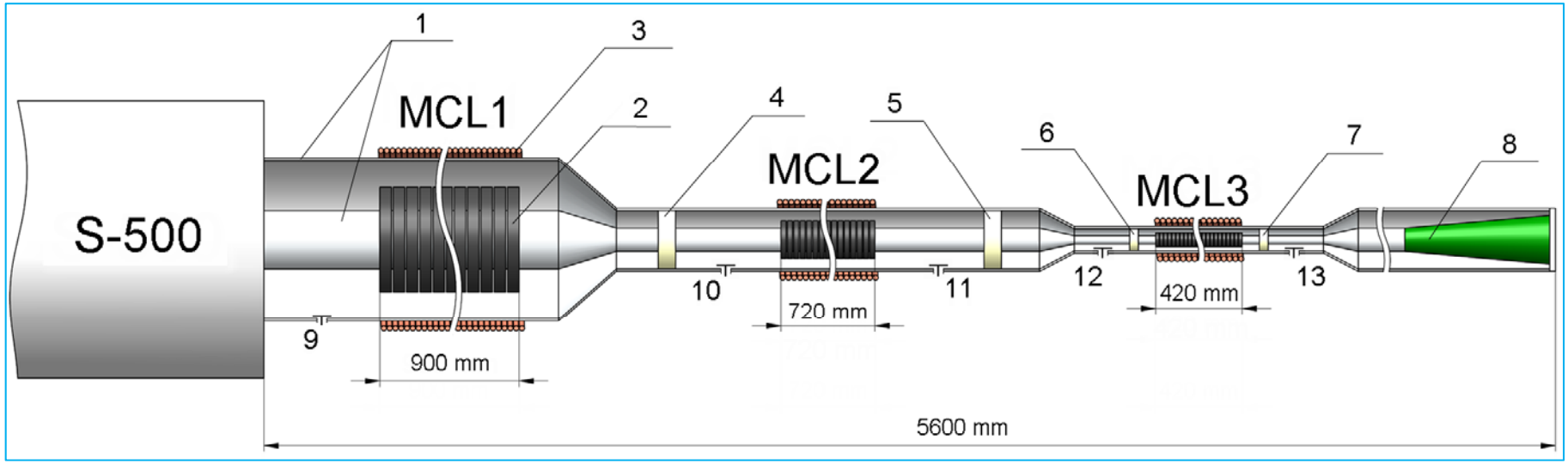

Parameters of the Pulses in Three-stage Compressor

Pulse	***V*** ^{m} (MV)	***P*** ^{m} (GW)	***FWHM*** (ns)	***(dV/dt)*** ^{m} (MV/ns)	***(dP/dt)*** ^{m} (GW/ns)
Input pulse	0.5	6.0	7.0	0.11	2
MCL1	0.74	13.6	2.2	0.58	21
MCL2	1.12	31.4	0.65	2.8	110
MCL3_50	1.48	45.3	0.25	9.7	463
MCL3_38	1.62	54.6	0.17	14.8	715

Three-stage compressor

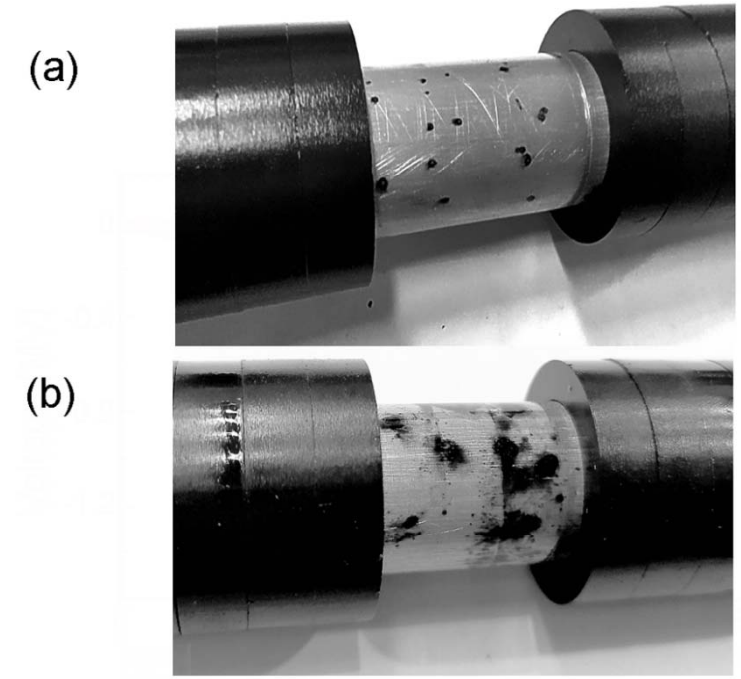

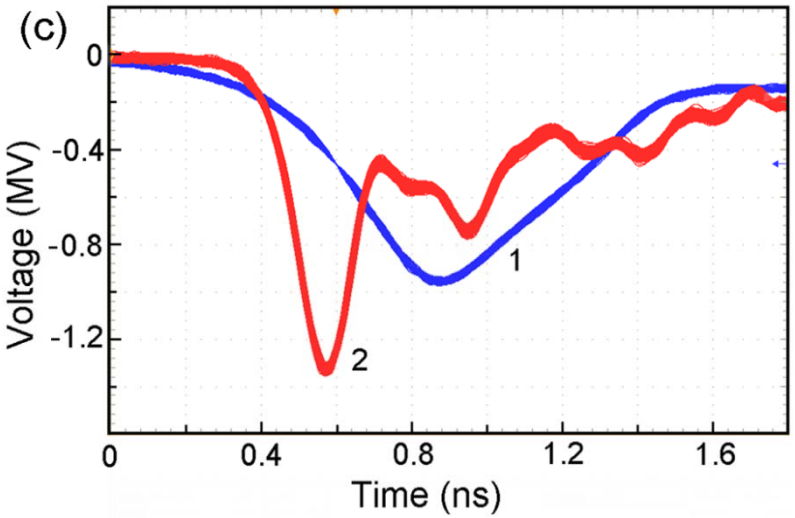

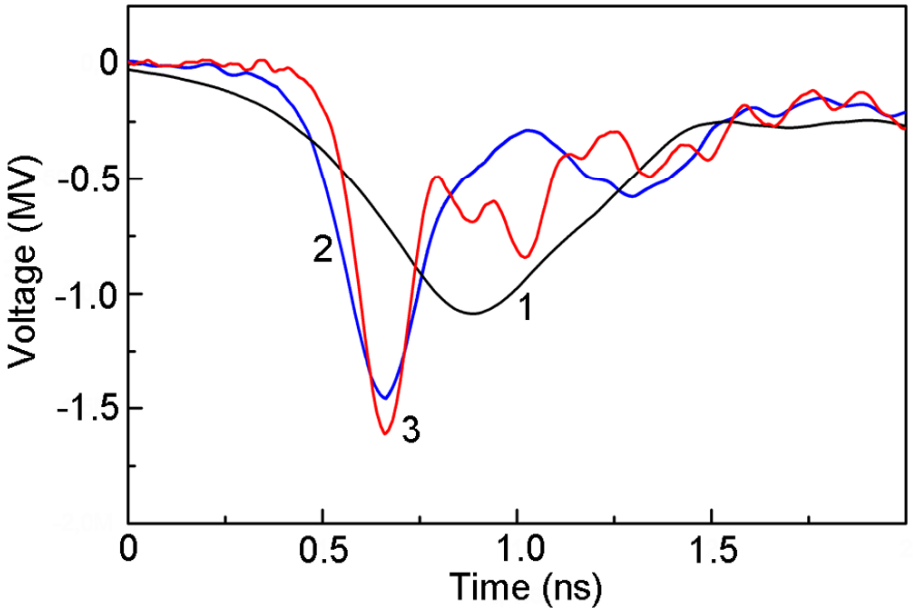

Waveforms of the input pulse to line MCL3 (curve 1), output pulse after 50-mm line (curve 2), and after 38-mm line (curve 3) at optimal values of n and H_Z in both lines.

Surface of the inner conductor at the end of 38-mm MCL3 line after 50 pulses in single pulse mode (a) and after 1,200 pulses (PRF = 300 Hz, 4-s burst) in repetitive mode (b); (c) superposition of 1,200 pulses in 4-s burst at PRF = 300 Hz for 38-mm MCL3 line: 1 – input pulse, 2 – output pulse.

Four-stage compressor

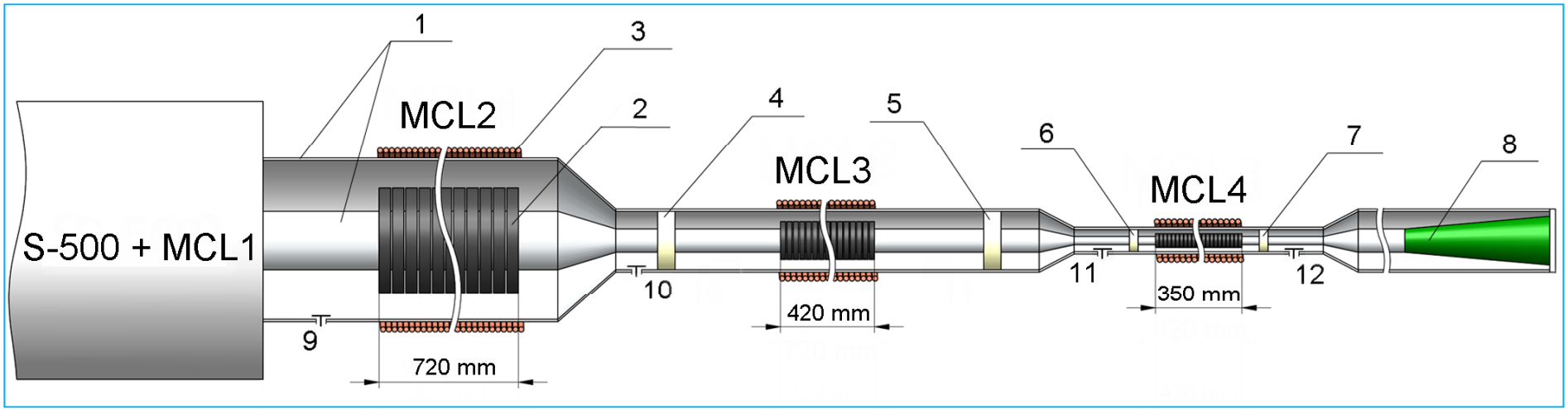

Parameters of the Pulses in Four-stage Compressor

Pulse	***V*** ^{m} (MV)	***P*** ^{m} (GW)	***FWHM*** (ps)	***(dV/dt)*** ^{m} (MV/ns)	***(dP/dt)*** ^{m} (TW/ns)
Input pulse	1.48	45.3	250	9.7	0.46
MCL4_26	1.74	63.0	130	23.3	1.16
MCL4_22	1.93	77.3	105	26.2	1.65

Four-stage compressor

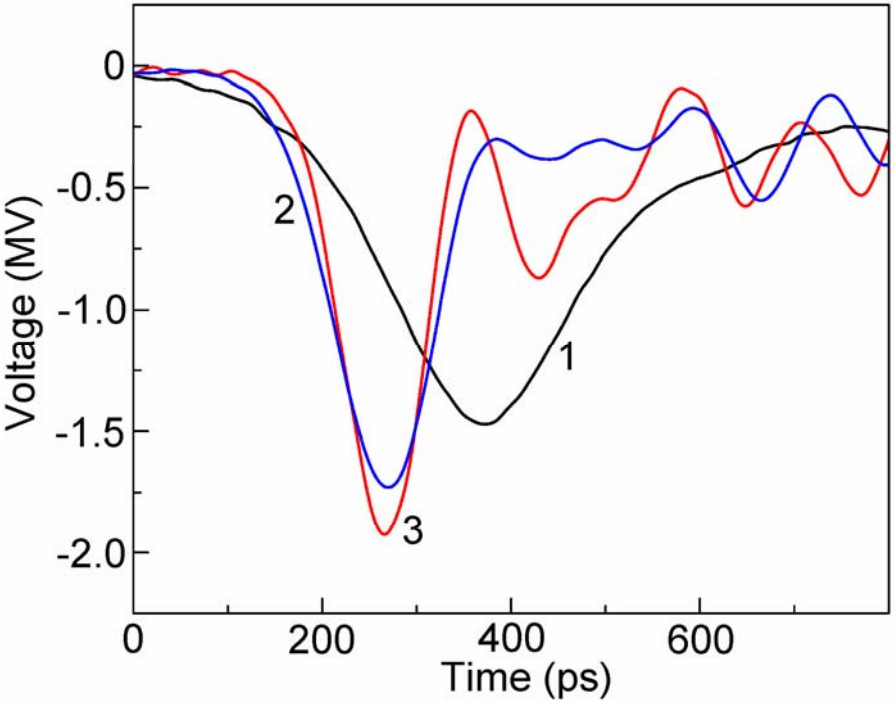

Waveforms of the input pulse to line MCL4 (curve 1), output pulse after 26-mm line (curve 2), and after 22-mm line (curve 3) at ferrite filling length of 350 mm and H_Z of 200 kA/m for both lines.

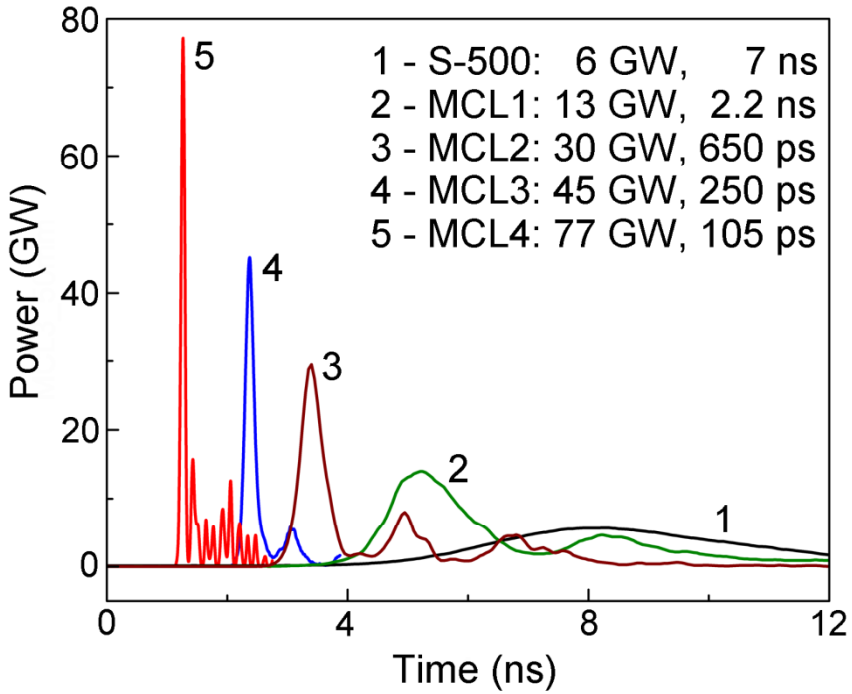

Energy compression process in the whole system: power waveforms of the input pulse (1), after line MCL1 (2), after line MCL2 (3), after 50-mm MCL3 line (4), and after 22-mm MCL4 line (5).

Total Changes in Input Pulse Parameters After Four-stage Compression

Parameter	V^{max}	P^{max}	FWHM	$(dV/dt)^{max}$	$(dP/dt)^{max}$
Change (in times)	↑ ~3.8	↑ ~13	↓ ~65	↑ ~230	↑ ~820

Limitations of the method

- Since one line increases the peak power ~2 times, the higher gain values are realized when connecting the lines in series.
- At the transition from the previous stage of amplification to the next one, the input pulse duration is reduced, which requires a proportional decrease in the period of oscillations in the line by reducing its transverse dimensions.
- The main limitation of the described method is an inevitable increase in electric and magnetic fields in the lines during the pulse energy compression in time.

Magnetic and Electric Fields in the Lines

Line	H_Z (kA/m)	I^{max} (kA)	H_θ (kA/m)	H_Z / H_θ –	E^{max} (MV/cm)
MCL1	32	18.6	41	0.78	0.15
MCL2	65	27.8	169	0.38	0.6
MCL3_38	106	37.2	592	0.18	2.1
MCL4_22	200	47.6	1517	0.13	4.8

- Increase in electric field to units of MV/cm leads to breakdown of the lines.
- Decrease in H_Z/H_θ value reduces the power gain K_P.

Four-stage MCL system

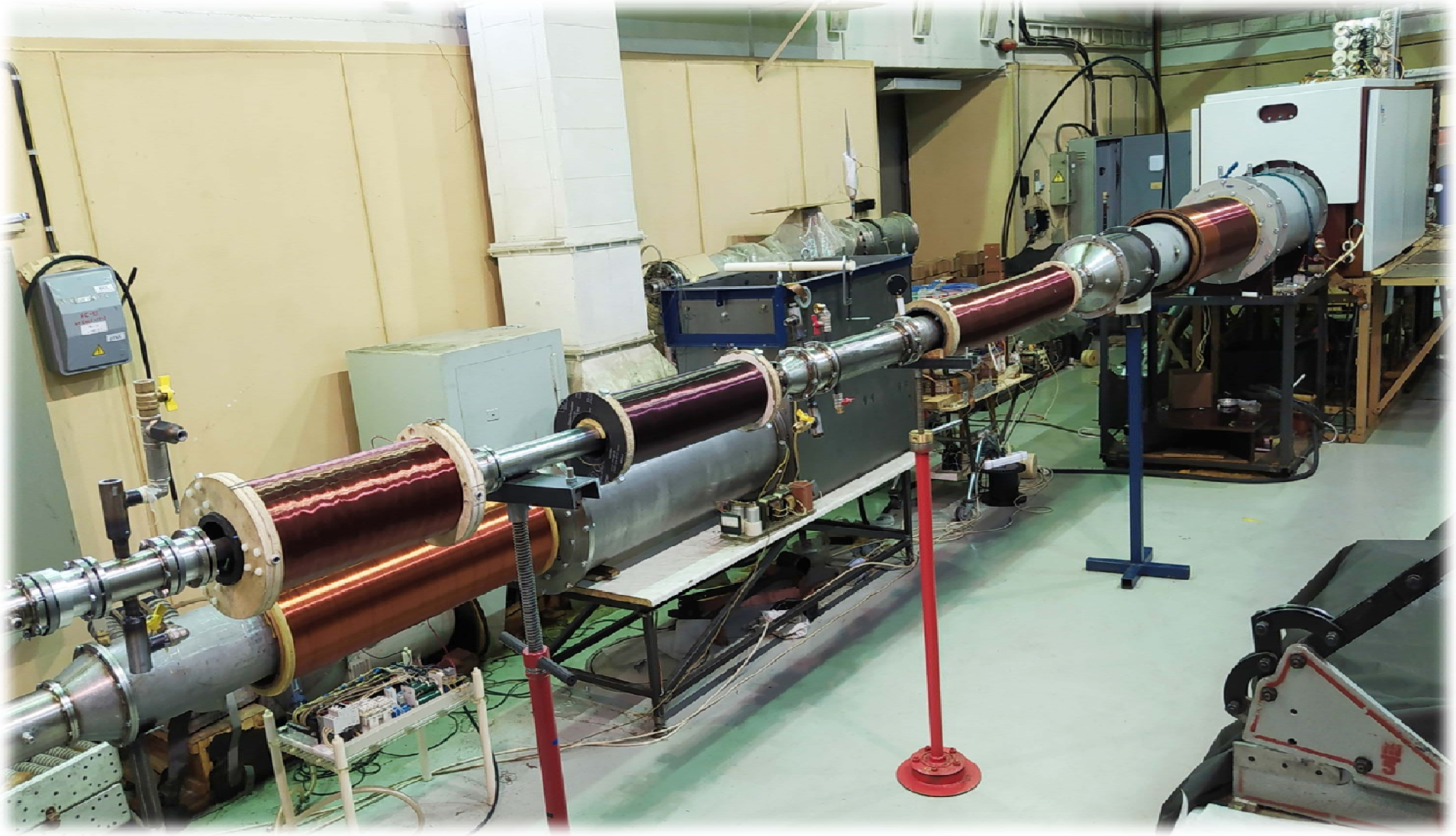

Conclusions

- The paper shows the possibility of creating **picosecond solid-state generators with a peak power of tens of GW.** In the proposed approach, an input pulse of nanosecond duration from a solid-state SOS generator is amplified in power and reduced in duration by a four-stage magnetic compressor on ferrite gyromagnetic lines.

- In the approach, the **line of each stage operates in the Magnetic Compression Line (MCL) mode**, which is realized at close values of the input pulse duration and the period of oscillations generated in the line.

- The most important feature of the approach is that **neither closing nor opening switching elements are required** in the pulse compression system. The pulse amplification in power and its compression in time occur automatically during the passage of the pulse along the line.

- The record high value of the voltage rise rate of **26 MV/ns** was achieved **for electric pulse generators of any type.**

- The record high values of the peak power (**77 GW**) and its rise rate (**1.6 TW/ns**) were achieved **for solid-state pulsed power systems.**