PHYSICAL PECULIARITIES OF CURRENT DEVELOPMENT IN EPTRON

P.A.Bokhan[1], P.P. Gugin[1], M.A. Lavrukhin[1], I.V. Schweigert[2], D.E. Zakrevsky[1,3]

[1]A. V. Rzhanov Institute of Semiconductor Physics SB RAS, Novosibirsk, Russia

[2]Khristianovich Institute of Theoretical and Applied Mechanics SB RAS, Novosibirsk, Russia

[3]Novosibirsk State Technical University, Novosibirsk, Russia

Eptron is a gas-discharge device based on a combination of two successively developing discharges, one of which provides the formation of a plasma cathode (hollow cathode discharge, open discharge OD), and the other closes the current development circuit (discharge in the capillary). The capillary, on the one hand, complicates the ignition, but, on the other hand, weakly affects the development and combustion of the discharge and provided acceleration of plasma recombination in the inter-pulse period.

When a high voltage is applied to the eptron, runaway electrons are generated in the capillary structure, which fly freely from the plasma cathode to the anode of the capillary structure

A necessary element of the capillary design was the organization of an external grounded shield in order to provide a mechanism for neutralizing surface charges on the inner wall of the capillary due to the bias current and a decrease in the electron concentration inside the channel, which leads to an increase in the delay time for the development of the discharge and ensuring the frequency of functioning of the eptron.

Design of the gas-discharge switch-eptron (a) coaxial round OD with round or slit capillary; (b) planar OD with slit capillary

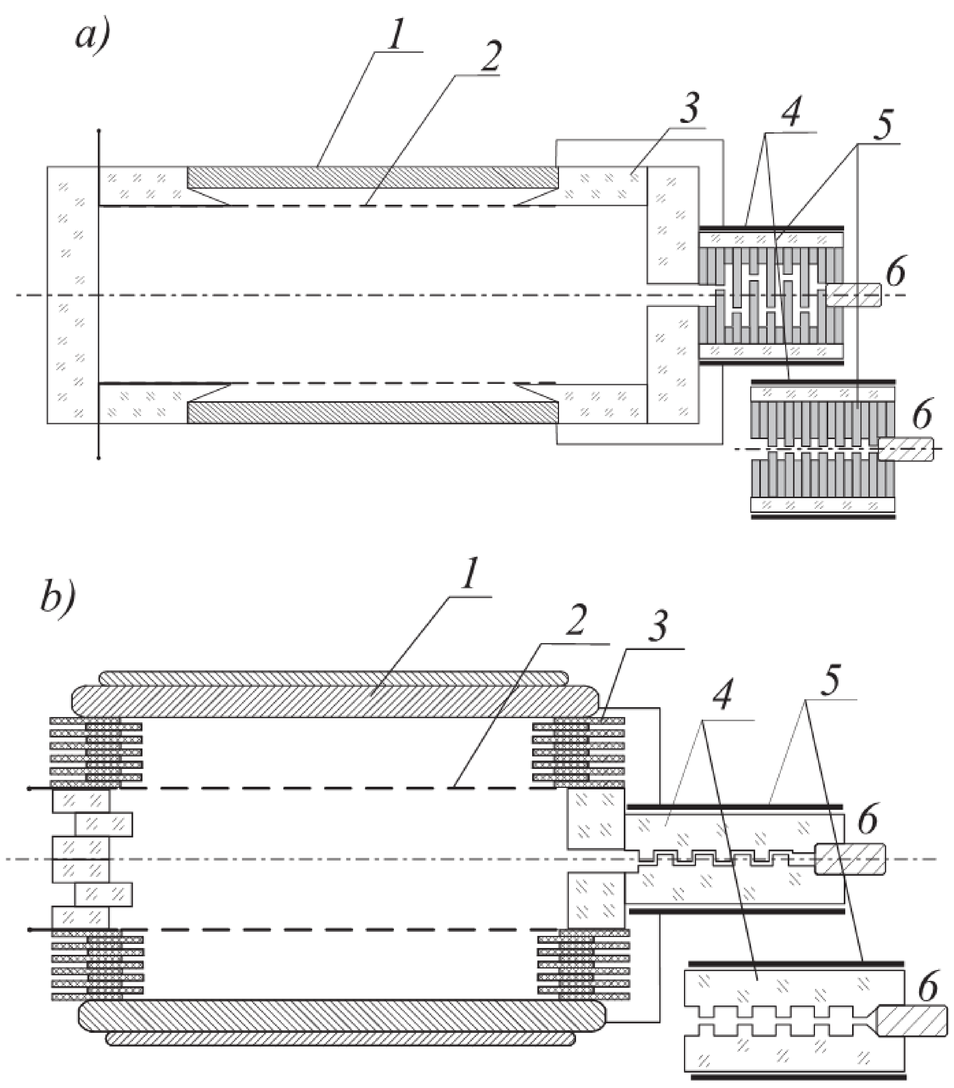

(1) cathode;
(2) grid electrode;
(3) insulator;
(4) metal shield;
(5) capillary structure;
(6) anode

Waveforms of the eptron anode U, load U_L voltage and current I. p_{He} = 5.7 Torr, f = 10 kHz.

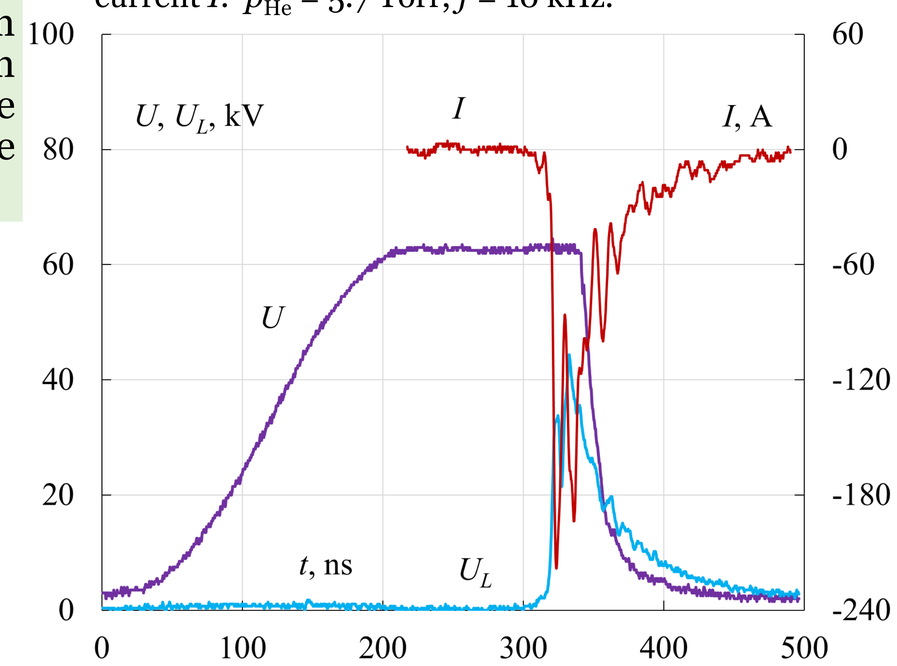

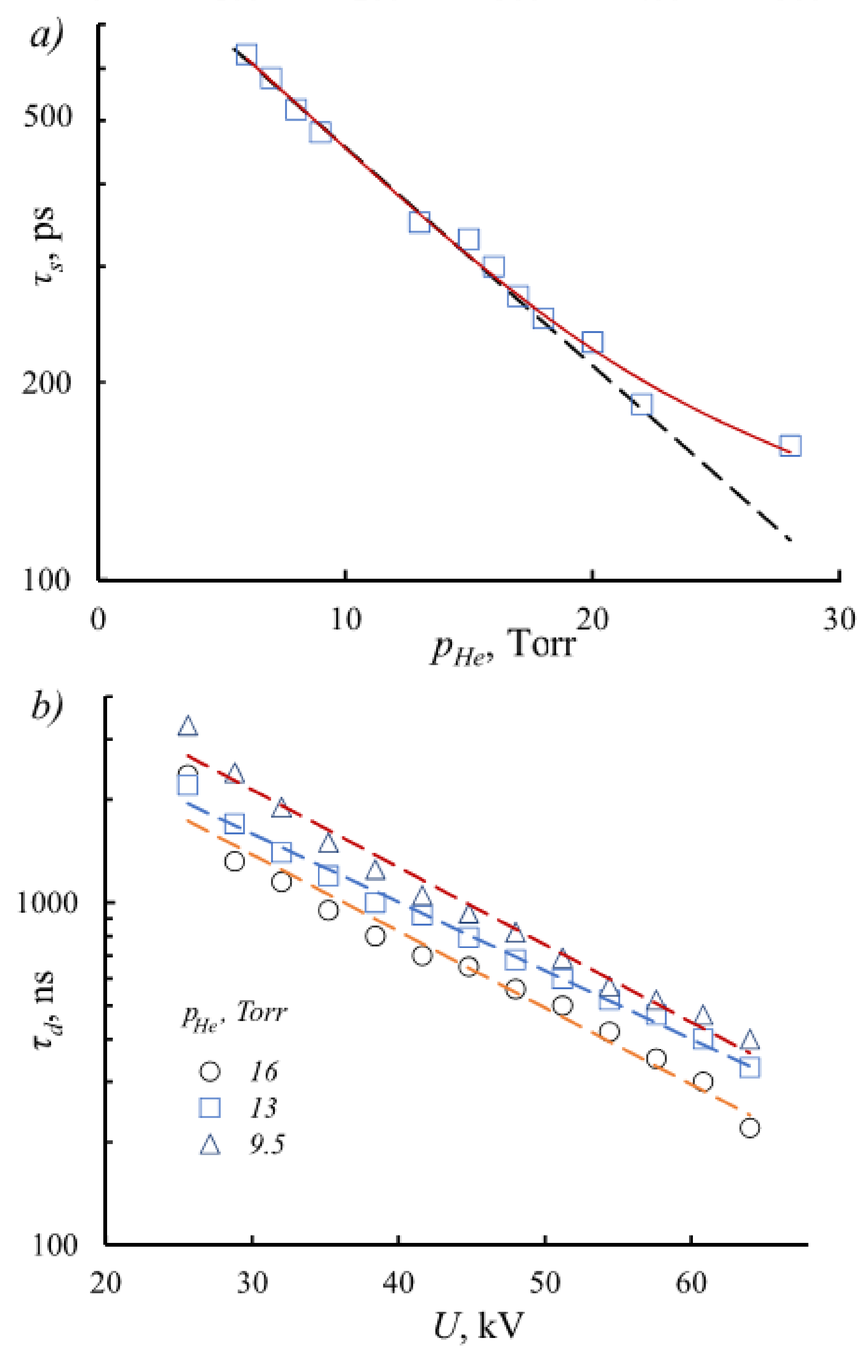

Dependencies (a)—$\tau_s(p_{He})$ at U = 65 kV; (b)—$\tau_d(U)$ for different p_{He} values;

Advancement in large working voltages required a constructive modification of eptrons. Capillary discharge structures were developed and implemented, in which the possibility of generating runaway electrons with an energy sufficient to fly along the entire length of the capillary from the plasma cathode to the anode was limited. The modernization consisted in the displacement of the axes of the rings forming the capillary, so as to prevent the penetration of runaway electrons generated in any ring into the hole in the subsequent ring.

As a result, typical discharge parameters turned out to be the following: τ_d~1μs, τ_s~0.5ns at a working helium pressure of p_{He}≈5Torr and U=60kV. Using similarly upgraded slotted capillaries with geometries, the parameters τ_d~0.2μs, τ_s~0.150ns were obtained at a working pressure of up to p_{He}≈30Torr and up to U=70kV.

*The work was supported by the Russian Science Foundation under grant No. 19-19-00069.