EFRE 2020 | 7th International Congress on ENERGY FLUXES AND RADIATION EFFECTS — ONLINE

September 14 - 26, 2020 | Tomsk, Russia

TUSUR UNIVERSITY

FORMATION OF PARTICLE FLOWS FROM A BEAM PLASMA GENERATED BY A FOREVACUUM PLASMA ELECTRON SOURCE

Aleksandr **Klimov**,

Ilya **Bakeev**,

Van Tu **Tran**,

Aleksey **Zenin**

Tomsk, 2020

Abstract

Beam-plasma technologies are currently successfully used for surface treatment of various materials, coating deposition, plasma-stimulated synthesis and decomposition of inorganic and organic compounds. The most interesting for application is a highly nonequilibrium beam plasma, because it has high chemical activity and ease of control of its parameters due to the variation of the parameters of the electron beam used for its generation. The current stage in the development of beam-plasma technologies has allowed the creation of plasma generators for various applications - from microelectronics to medicine. In this work, a beam plasma generator is described that operates at pressures of 10–50 Pa and allows the generation of a plasma with the concentration of 2×10^{16} cm^{-3} and the temperature of 5 eV. The main feature of the generator is the use of a forevacuum plasma electron source for gas ionization and beam plasma generation. The effect of ion treatment from such a plasma on the optical and surface properties of polypropylene is determined. It is shown that after processing, the absorption in the ultraviolet region increases, and the hydrophilicity of the material also increases.

Schematic of the experimental setup and parameters

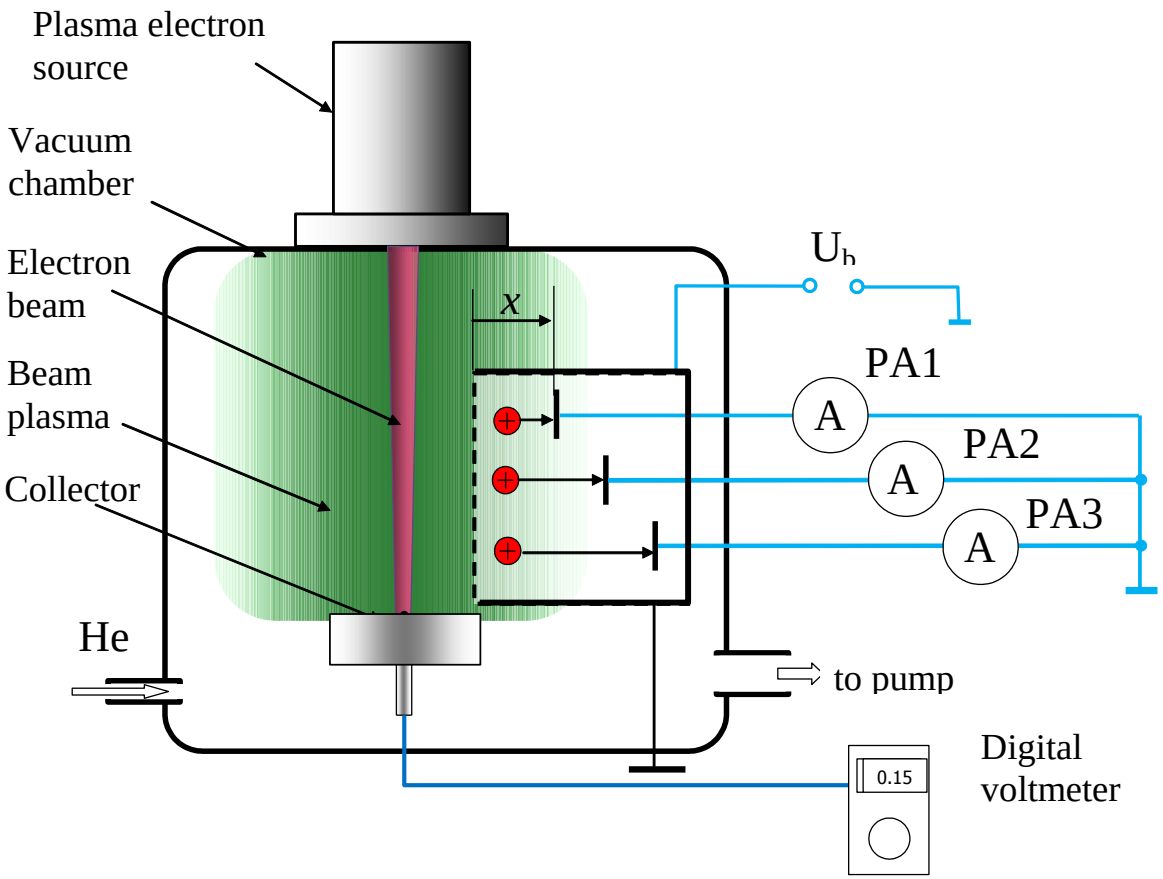

Parameter	Value
Beam current, mA	от 1 до 500
Beam diameter in crossover, mm	0,5-0,8
Energy of the beam electrons, keV	2-20
Mode of operation	continuous
Working gas	He, N_2, O_2, Ar, etc.
Gas pressure in a vacuum chamber, Pa	5-50
Distance to the target, cm	15-50
Scan mode / Frequency, Hz	raster, circular/0-100
Size of the scanning area, mm^2	1-2500

Dependence of the ion current from the plasma on the distance to the extracting grid

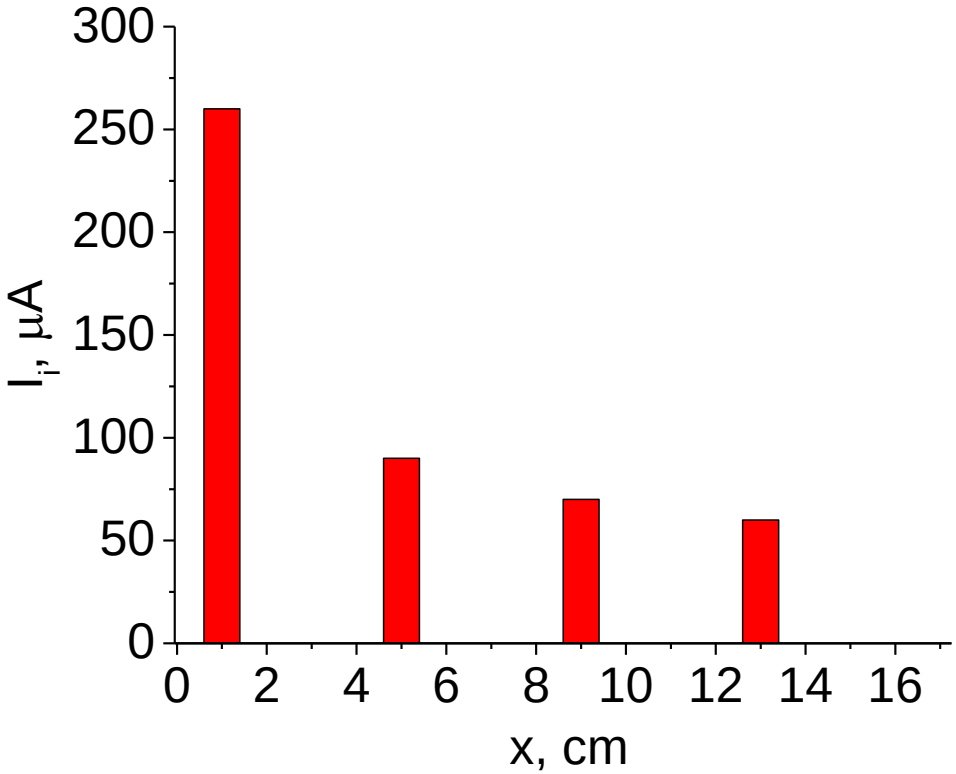

Beam current of 200 mA, an accelerating voltage of 3 kV and a pressure of 10 Pa

Transmittance of the samples after processing

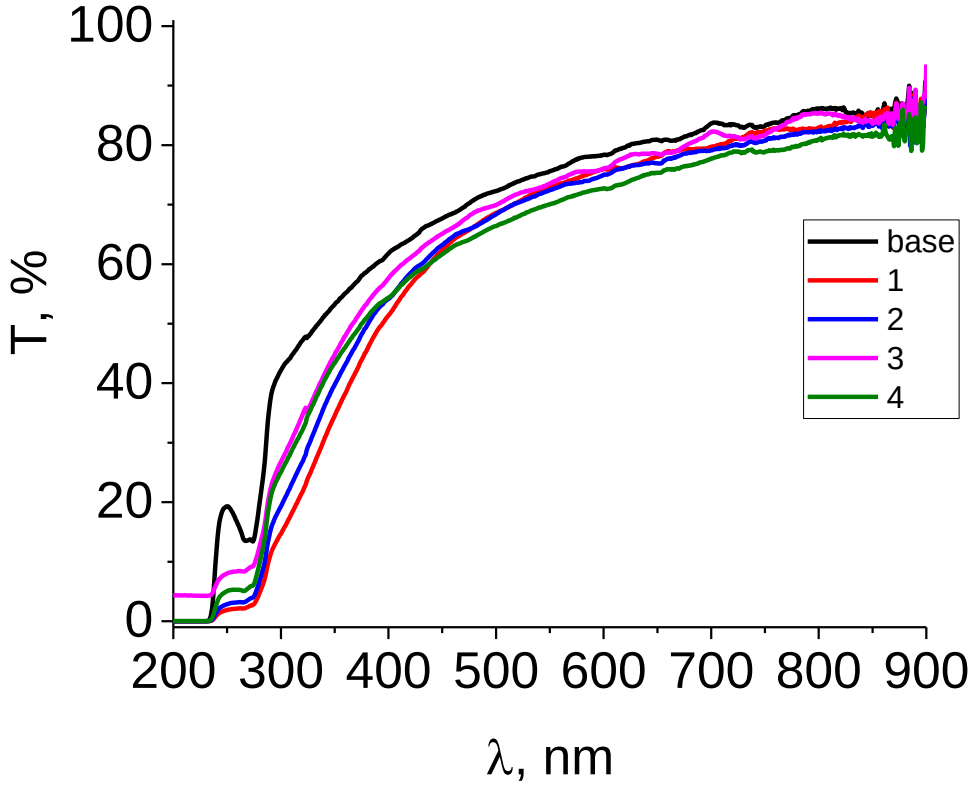

The numbering of the samples corresponds to their distance to the extraction grid during irradiation - sample 1 was located at a distance of 1 cm, sample 2 at a distance of 5 cm, sample 3 at a distance of 9 cm, sample 4 at a distance of 14 cm.

Contact angle for the treated and untreated samples

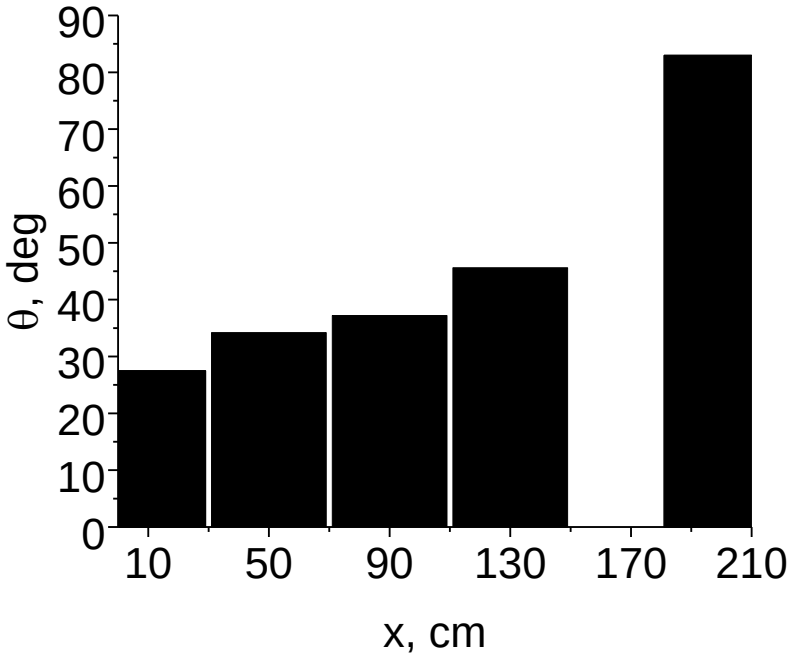

Unirradiated sample

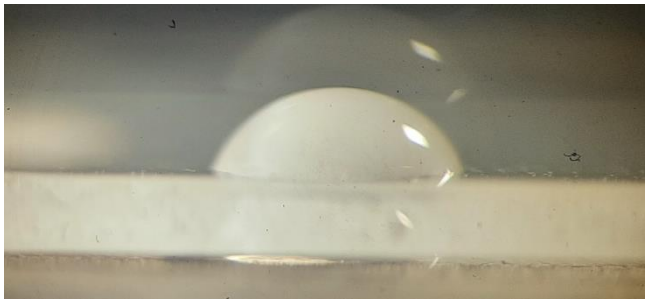

Sample No. 1

It can be seen that even in the sample located at a considerable distance from the extracting grid, an increase in hydrophilic properties is observed. The edge angle decreases from 83 degrees (for an unprocessed sample) to 27 degrees for sample No. 1, which is located closest to the extraction grid.

Conclusion

When an electron beam passes through the atmosphere of a vacuum chamber, an electron-beam plasma with a concentration of 10^{15} cm^{-3} is generated. The ion current from such a plasma to a substrate with an area of 2 cm^2 reaches 300 mA. In this case, undesirable heating of the irradiated samples is not observed. After plasma ion treatment of polypropylene substrates for 20 minutes, an increase in the hydrophilic properties of all samples is observed. The contact angle is reduced by almost three times, which can be useful in the technology of applying paint to polypropylene. The reduction in transmittance after processing can be useful in the manufacture of filters. The presented results will be supplemented in further studies.

The work was supported by the Grant of the President of the Russian Federation (№.MD-2649.2019.8)